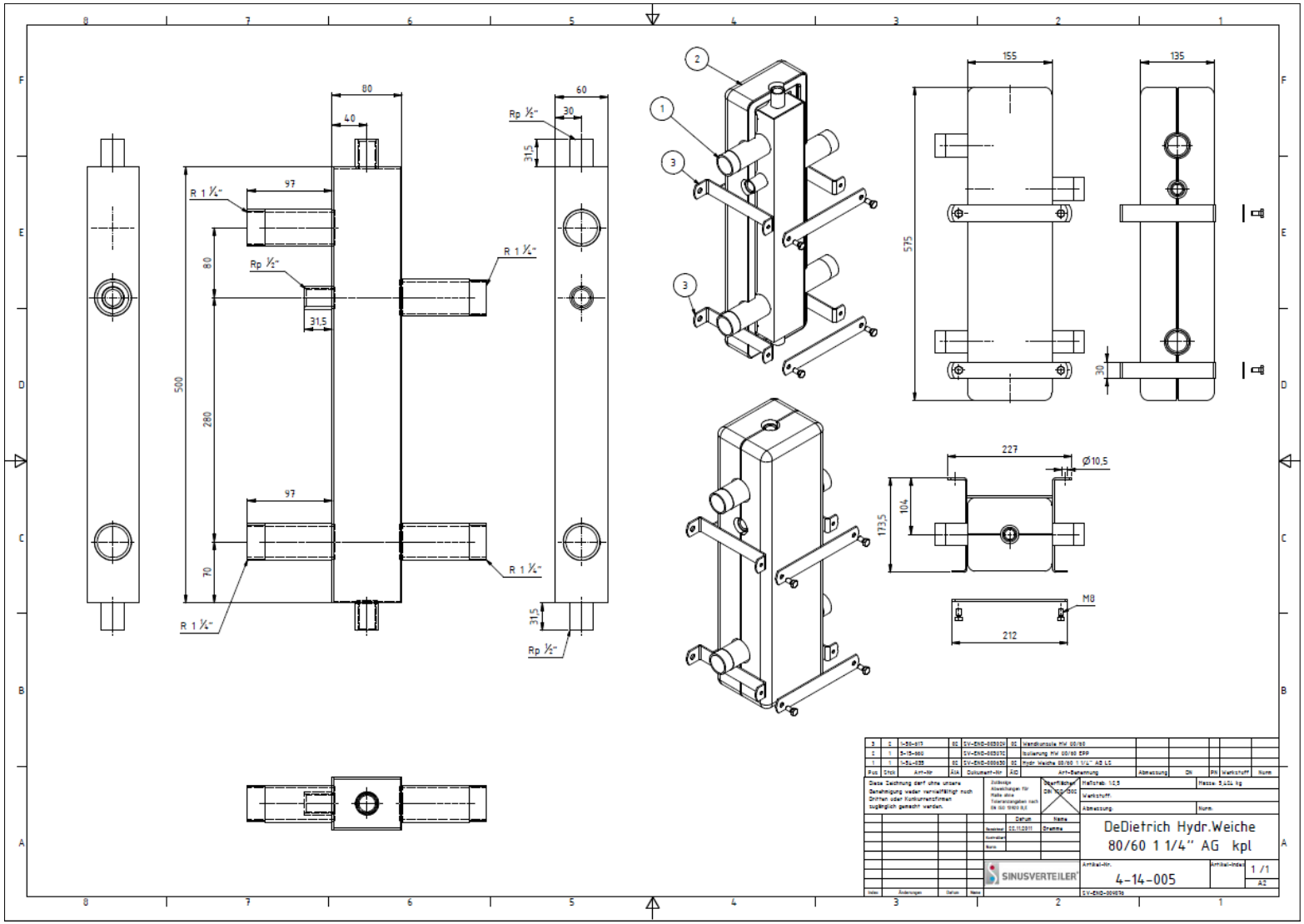

ITEM Nº. 100019347

Packaging dimension : 690x375x205

Weight : 6,4 kg

De Dietrich THERMIQUE

THIS DRAWING IS PROPERTY OF
DE DIETRICH THERMIQUE.
ALL RIGHTS RESERVED.
It may not be submitted for perusal to third parties, either whole nor partly, unless granted.
It is not permitted to alter this drawing unauthorised, in any way.

Drawn & general tolerance acc. ISO 8015 E

Form & orientation tolerance according ISO 1101

System of limits & fits acc. ISO 286 "Shaft Base"

This product has to comply with: EN297, EN304, EN437, EN378, EN656, EN14276, EN15034, EN15035, EN15417, EN60335, 97/23/CEE, DIN 4753

Supplementary standards :

Tolerance unless otherwise specified :

Part specifications : **NONE**

Material :

Description :

BOUTEILLE DECOUPL . 80/60-1" 1/4 GV46

0 30 60

Base Scale : % | Format : A3 | Units : mm

EC-nr : EC-description :

Modified by :-	Date : 31/12/2999
Created by :KOLMER	Date : 16/04/2012
Approved by :SINGER	Date : 16/04/2012

100019347-001-01

Doc. nr :

Temporary Doc. nr. -