HEAT PROOF ELECTRIC VINYL WIRE
UL1015, AWG18, 105℃ (ℓ =1500±50)

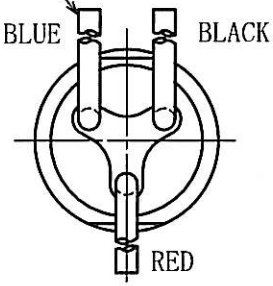

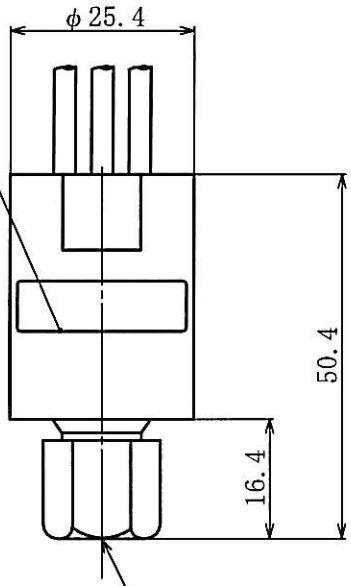

LABEL

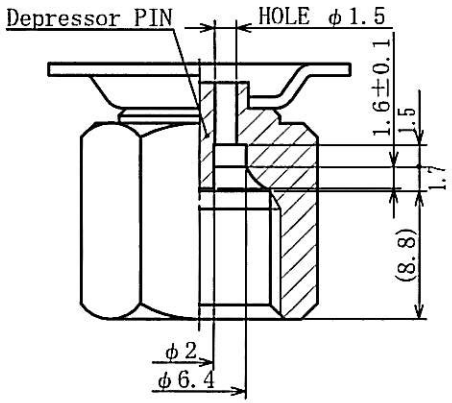

(2:1)

HEX 14
7/16-20 UNF FOR FLARE
With Depressor pin

★CONFIRMATION OF DESIGN VALIDITY
We manufacture the product based on the specifications described in this drawing. Please check the safety and validity in the product design in consideration that the product is conformed to the system or not when using.

OPERATING PRESS. CHARACTERISTICS.	OPERATING PRESS. SETTING UNIT:bar{psi}		DIFFERENTIAL
	OFF	O N	
	26±1.0 {380±14}	20±1.5 {290±21}	—

ELECTRICAL RATINGS	PED TYPE	RATED VOLTAGE (V)		A C
		RATED AMPS. (A)		250
		INDUCTIVE AMPS.		1～4
	UL TYPE	RATED VOLTAGE (V) / RATED AMPS. (A)	PF Cos φ	A C / 120 240
		FULL LOAD AMPS.	0.75	8
		LOCKED ROTOR	0.45	48

TYPE OF CONTACT	SINGLE POLE DOUBLE THROW RED C — L BLUE / H BLACK PRESS. RISING
CONTACT RESISTANCE	LESS THAN 200 mΩ
INSULATION RESISTANCE	NOT LESS THAN 100 MΩ AT DC 500V MEGGER
DIELECTRIC STRENGTH	WITHSTAND 1500V AC FOR ONE MINUTE
MAX. PRESSURE	45 bar {650 psi}
AIR TIGHT PRESS.	45 bar {650 psi}
TEST PRESS.	50 bar {725 psi}
MAX. ALLOW. TEMP.	AMBIENT TEMP. -30 ～ 85℃ (But no freeze) FLUID TEMP. -54 ～ 135℃
DURABILITY	10,000 TIMES
TÜV APPROVED	EN 12263 DIN 32733(DWK 4B 04102)
UL FILE NO. C-UL FILE NO.	E43867, E31024

Checked by: T. T.	Date: JUN. 08 2005	Name: TYPE CB PRESSURE SWITCH	
Designed by:	Scale: 1:1	Catalog Number: ACB-2UC57W	Drawing Number: N-CB-70173
Drawn by: K. H.	Code No. :061F 9055		

DATE	SIGN	CHANGE CONTENT

Danfoss
SAGInoMIYA