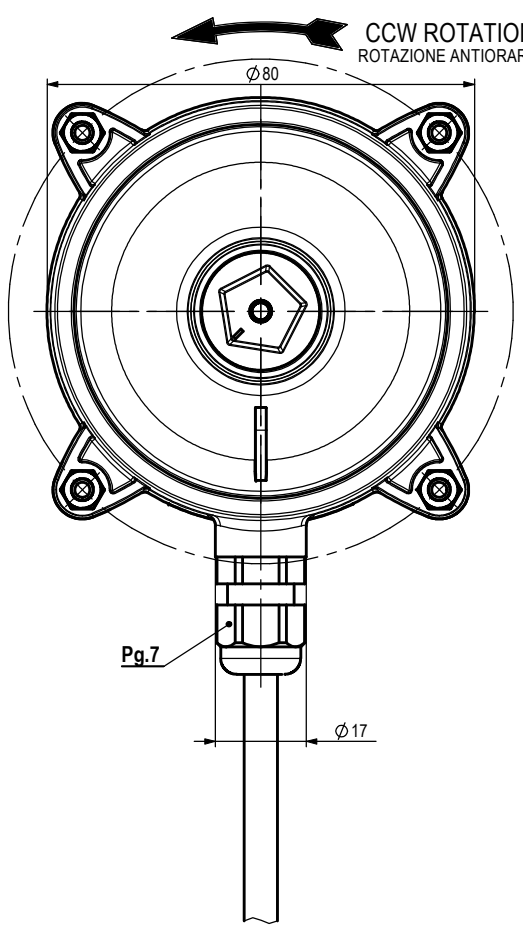

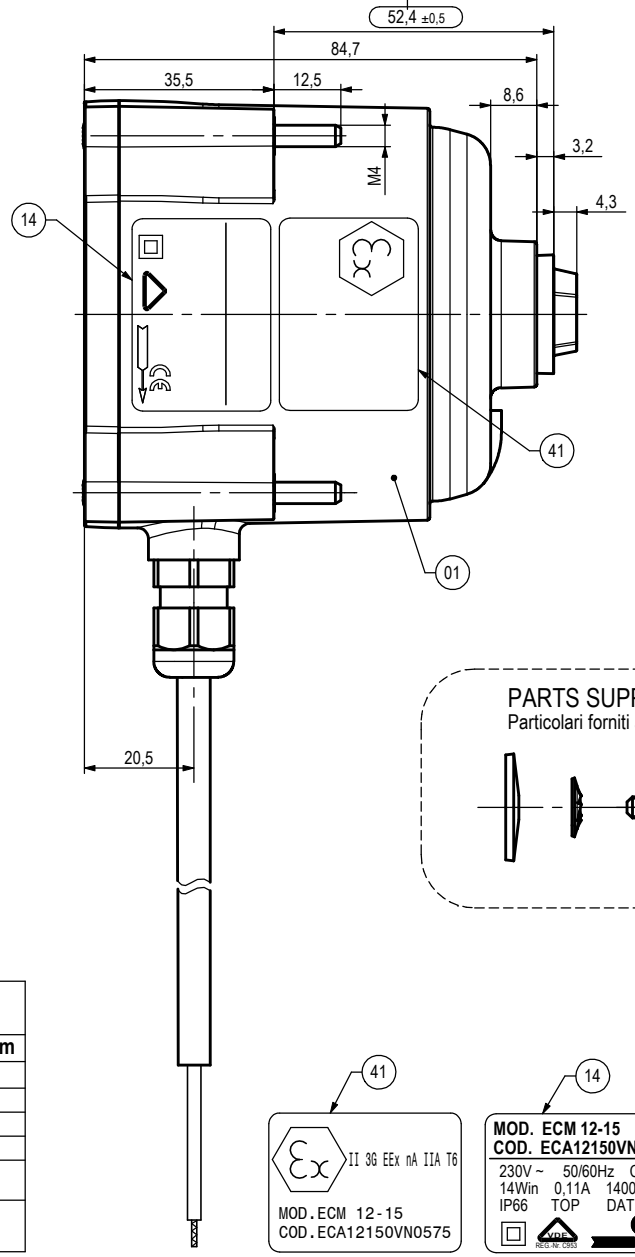

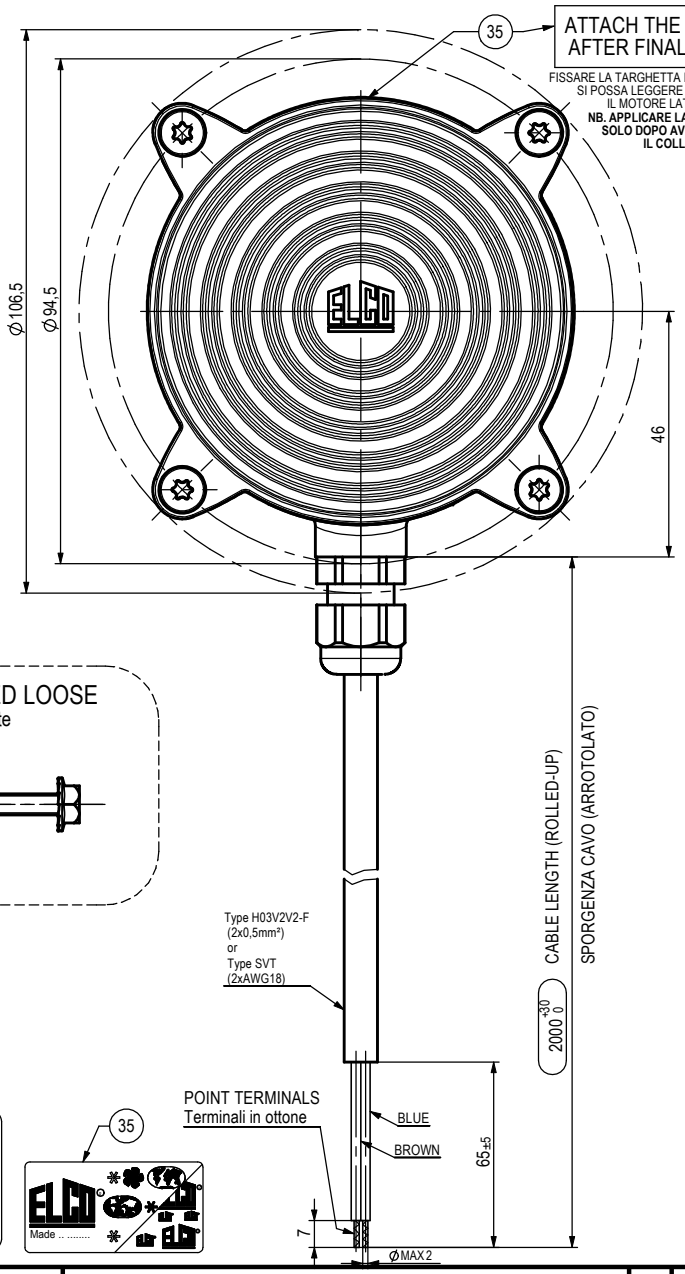

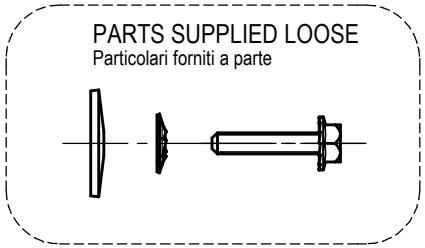

CLASS "B" MOTOR - BALL BEARINGS MANUFACTURED (Motore in classe "B" - Esecuzione a Cuscinetti)	
ELECTRONIC BOARD (Scheda elettronica)	**1/2H - 1500Rpm**
PLASTIC BODY and BACK COVER (Corpo e fondello in plastica)	-
PLASTIC FAN BLADE HUB (Portaventola in plastica)	-
OPERATING INSTRUCTIONS	OI-ECM /01
ASSEMBLING SPECIFICATION (Normativa di Assemblaggio)	EL.UN.0098
ONLY MOTOR - ELECTRICAL SPECIFICATION (Solo Motore - Prescrizione controllo elettrico)	M.2109/1
MOTOR WITH FAN BLADE SUGGESTED for SPEED TEST- ELECTRICAL SPECIFICATION (Motore con ventola suggerita per Test di velocità - Prescrizione controllo elettrico)	F.2109/1A

41

Ex II 3G EEx nA IIA T6
MOD.ECM 12-15
COD.ECA12150VN0575

14

MOD. ECM 12-15
COD. ECA12150VN0575
230V ~ 50/60Hz Cl.B
14Win 0,11A 1400Rpm
IP66 TOP DATE
VDE REG.Nr. C893

35

Made .....

Rel.	Date	Description	Executor signature	Checked
.	.	.	.	.

M O D I F I C A T I O N S

For dimension without tollerance see standard UNI EN 22768-mK

Treatement .
Material .

A3

Drawn M.Cazzaniga
Date 09/01/17
Check F.Crippa
Scale 1:1

MOTOR ECM 12 230V IP66 V
230V 50/60Hz - **1500Rpm**
PROTECTION DEGREE IP66

Weight gr. .
Ref. No R.S.16/0161
Release -

ECA12150VN0575

DRAWING MADE BY **CAD** HAND MADE MODIFICATIONS ARE FORBIDDEN
THIS DRAWING IS OUR PROPERTY. ANY PARTIAL OR COMPLETE COPY IS FORBIDDEN WITHOUT PREVIOUS WRITTEN AUTHORISATION