PARTS LIST BUTTERFLY VALVE		
ITEM	QTY.	DESCRIPTION
1	1	SHAFT
2	1	ANTI-BLOW-OUT-COVER
3	2	RADIAL BEARING
4	1	O-RING
5	1	BODY
6	2	BEARING
7	1	DISC
8	1	SHAFT
9	1	LINING
10	1	SEAL RING
11	1	PLUG
12	2	CSK SOCKET SCREW

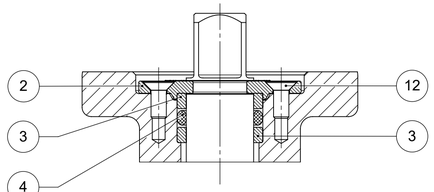

SECTION C-C
SCALE 1 : 1

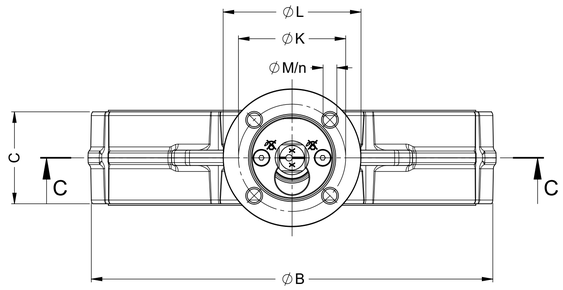

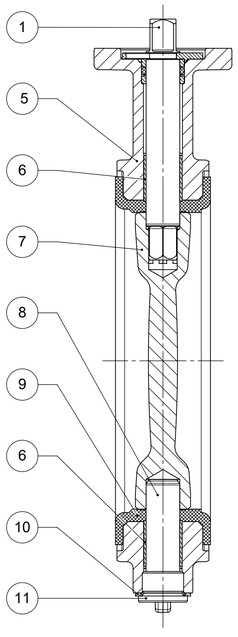

SECTION A-A

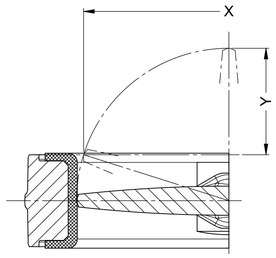

SECTION B-B

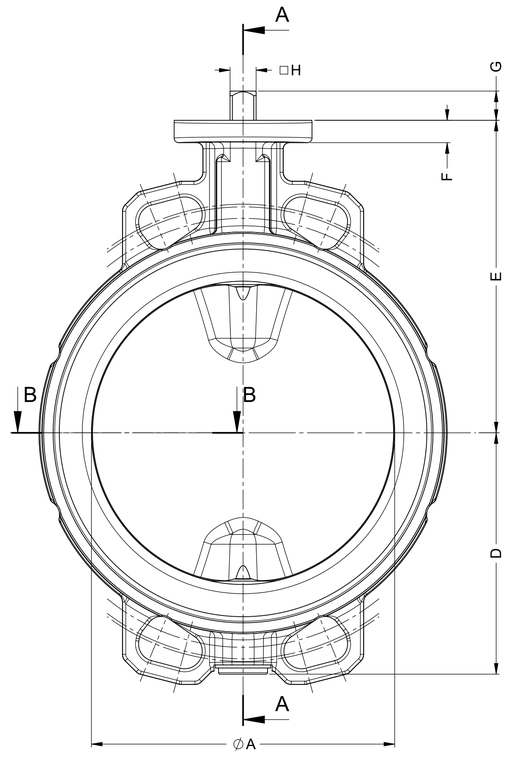

DN: 40 - 350

DIMENSIONS BUTTERFLY VALVE (mm)									
DN	NPS	A	B	C	D	E	F	X	Y
40	(1,5")	40	86	33	58	113	12	24	4
50	(2")	50	100	43	63	118	12	27	4
65	(2,5")	65	115	46	71	126	12	47	10
80	(3")	80	130	46	78	133	12	67	18
100	(4")	100	150	52	98	147	12	87	25
125	(5")	125	182	56	109	160	12	113	35
150	(6")	150	210	56	133	180	14	140	48
200	(8")	200	262	60	158	204	14	191	70
250	(10")	250	315	68	194	245	15	242	92
300	(12")	300	371	78	219	270	15	289	111
350	(14")	336	405	78	236	315	15	328	130
350	(14")	336	405	78	236	315	15	328	130

DIMENSIONS ACTUATOR ATTACHMENT (mm)							
DN	G	H	K	L	M	n	Δ Pmax
40	10	9	70	90	9	4	16 bar
50	10	9	70	90	9	4	16 bar
65	10	9	70	90	9	4	16 bar
80	10	9	70	90	9	4	16 bar
100	12	11	70	90	9	4	16 bar
125	16	14	70	90	9	4	16 bar
150	16	14	70	90	9	4	16 bar
200	19	17	70	90	9	4	16 bar
250	24	22	102	125	11	4	16 bar
300	24	22	102	125	11	4	16 bar
350	24	22	102	150	11	4	16 bar
350	24	22	125	150	13	4	16 bar

VALVE SUMMARY	
DN	+/- kg/pc.
40	2
50	3
65	4
80	4
100	5
125	8
150	9
200	14
250	23
300	35
350	43
350	43

Remarks:

ISO 128 - A

W. WITZEL
ORDER NR

CLIENT :
ORDER NR :
PROJECT :

REV	DATE	CODE	DRWN	APPR

SCALE : 1:2
DATE : 2023-01-19
DRAWN : B. Leeuw
APPROV: T. Pünt

WW EuroValve

ALL RIGHTS RESERVED

TITLE: BUTTERFLY VALVE

EVCS-I **DN 40 - 350**

FREE SHAFT

DRAWING NO: D-FAFA000–A

SIZE: A1

D-FAFA000